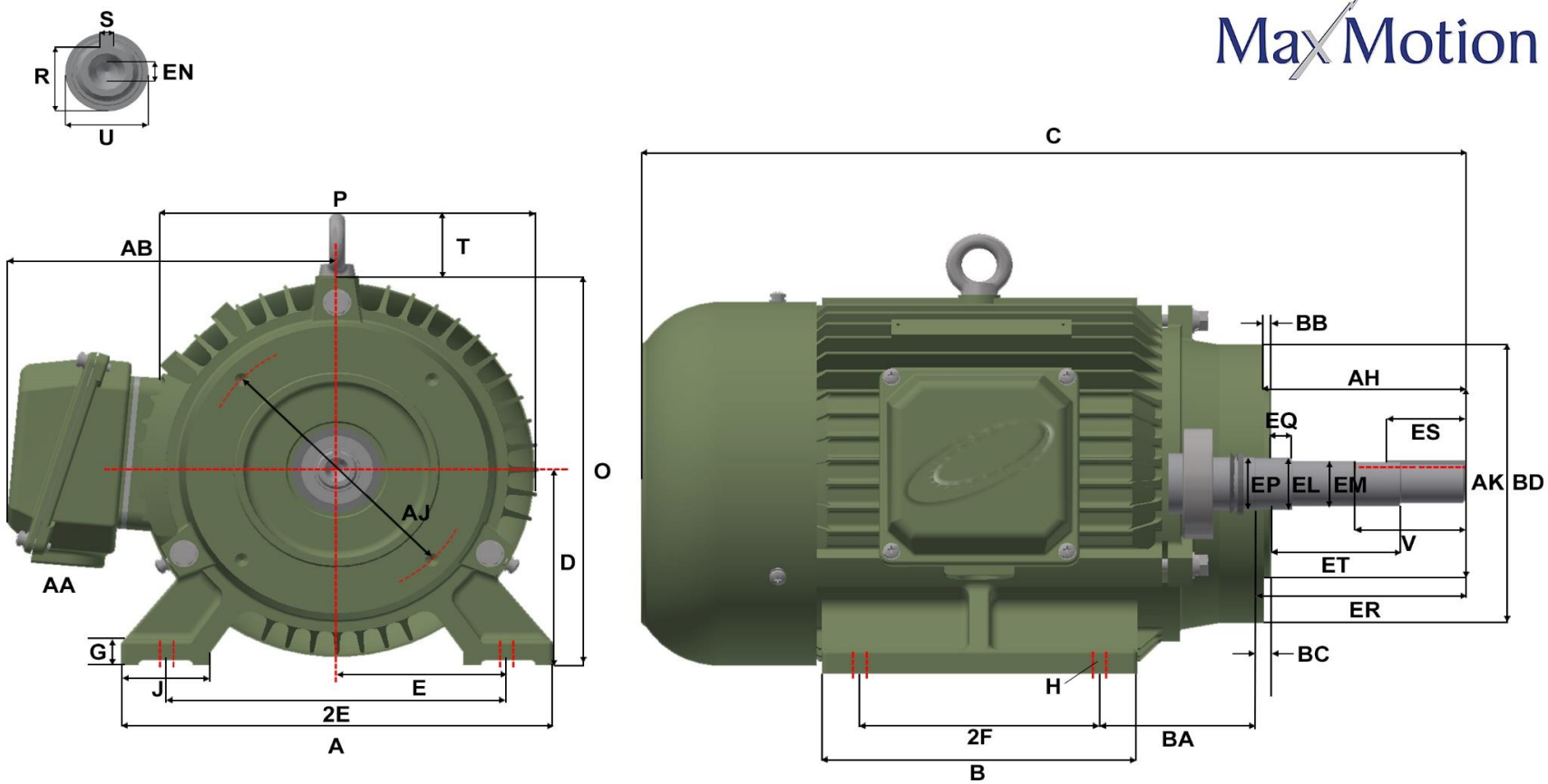

Version: 1WTI			Revised: 01-04-2020			HP	RPM	FRAME	ENCLOSURE	JPPP-JPQP-17			
Customer is responsible in determining that MEP product will fit/perform suitably in the intended application						3	1800	182JP	TEFC				
A	B	C	D	E	2E	2F	G	H	J	O	P	R	S
9.50	7.30	21.55	4.50	3.75	7.50	4.50	0.60	0.41	2.00	9.10	8.70	0.771-0.756	0.190-0.188
T	U	AA	AB	AH	AJ	AK	BA	BB	BC	BD	EL	EM	EN
1.60	0.8740-0.8745	0.75	7.50	7.312	5.875	4.500-4.497	3.50	0.156-0.125	0.12	6.62	1.250-1.248	1.0000-0.9995	3/8-16
EP	EQ	ER	ES	ET									
1.57	1.578-1.548	7.343-7.281	1.65	5.952-5.922									